NOTICE OF MEETING

BOARD OF ALDERMEN

Special Meeting – Thursday, July 16, 2020 – 2:00 p.m.
Council Chambers – Branson City Hall – 110 W. Maddux

AGENDA

CALL TO ORDER

ROLL CALL

REGULAR AGENDA:

1) First Reading of Bill No. 5837 amending Chapter 58 of the Branson Municipal Code pertaining to face coverings, public spaces and the spread of communicable diseases.

ADJOURN

Where Values are the Difference
JULY: TEAMWORK/COOPERATION
Less me; more we; working towards a common goal.

For more information please visit www.bransonmo.gov or contact:
Lisa Westfall, City Clerk, 417-337-8522

Posted: July 14, 2020
At: _____ By: _____

BILL NO. 5837

City of Branson MISSOURI

STAFF REPORT

ITEM/SUBJECT: **READING OF A BILL AMENDING CHAPTER 58 OF THE BRANSON MUNICIPAL CODE PERTAINING TO FACE COVERINGS, PUBLIC SPACES AND THE SPREAD OF COMMUNICABLE DISEASES.**

INITIATED BY: **EMERGENCY MANAGEMENT DIRECTOR | LEGAL DEPARTMENT**

FIRST READING: **JULY 16, 2020** **FINAL READING:** **JULY 16, 2020**

EXECUTIVE SUMMARY:

- This ordinance is designed to follow the recommendations of the CDC and our local health department by mandating face coverings and signage requirements for business operating within the City limits.

- On June 11, 2020, Governor Michael Parson announced through a press release that the State of Missouri would "fully reopen" and "there will be no statewide health order" in place and stated further that "[a]ll statewide restrictions will be lifted, though local officials will still have the authority to put further rules, regulations, or ordinances in place."

- COVID-19 has spread rapidly amongst the population of Missouri with twenty-seven thousand four hundred and forty-three (27,443) reported cases and one thousand sixty-nine (1,069) deaths as of 2pm on Sunday, July 12, 2020.

- Taney County has seen a 846% increase from thirteen (13) positive COVID-19 cases on June 6th to one-hundred and twenty-three (123) positive COVID-19 cases as of 2pm on Sunday, July 12, 2020.

- The authority for this ordinance is laid out in Section 79.380, RSMo which permits the Board of Aldermen to "make regulations and pass ordinances for the prevention of the introduction of contagious diseases in the city, and for the abatement of the same, and may make quarantine laws and enforce the same within five miles of the city."

- This ordinance has the following components:
  - Requires individuals to wear face coverings while in indoor and outdoor public spaces unless they are engaged in certain activities or under the age of thirteen (13).
  - Requires operators of public places to ensure guests use face coverings.
  - Requires signage at all businesses outlining requirements on social distancing and face coverings.
  - Penalty for violating is a $100 fine and potential revocation of business license and other permits.

- This ordinance will go into effect at 12:01AM on July 20, 2020 and remain in effect until 11:59PM, August 20, 2020 unless extended by the Emergency Management Director and City Administrator under authority granted by the Board of Aldermen.

- Staff is requesting a double read on this item.

FINANCIAL IMPACT:

___ **No impact/Not applicable**
___ **Budgeted in the current year's budget**
_X__ **Other (see additional explanation)**

STAFF RECOMMENDATION:

_X_ **Recommended**
____ **Not Recommended**
____ **Neutral/None**

COMMUNITY PLAN 2030: C-1: Public Safety

ATTACHED EXHIBITS:

EXHIBIT 1 – Why Wear a Face Mask
EXHIBIT 2 – How to Protect Yourself and Others | CDC
EXHIBIT 3 – How to Make a Face Covering | CDC
EXHIBIT 4 – Recent Studies on Face Coverings | CDC
EXHIBIT 5 – How to Wear a Face Covering | CDC
EXHIBIT 6 – How to Wash a Cloth Face Covering | CDC

I wear my mask in public for three reasons.

1. Humility: I don't know if I have COVID as it is clear that people can spread the disease before they have the symptoms.

2. Kindness: I don't know if the person I am near has a child battling cancer, or cares for their elderly mom. While I might be fine, they might not.

3. Community: I want my community to thrive, businesses to stay open, employees to stay healthy. Keep a lid on COVID helps us all.

EXHIBIT
1

Centers for Disease Control and Prevention
CDC 24/7: Saving Lives, Protecting People™

Coronavirus Disease 2019 (COVID-19)

How to Protect Yourself & Others

Older adults and people who have severe underlying medical conditions like heart or lung disease or diabetes seem to be at higher risk for developing serious complications from COVID-19 illness. More information on Are you at higher risk for serious illness?

Know how it spreads

- There is currently no vaccine to prevent coronavirus disease 2019 (COVID-19).
- **The best way to prevent illness is to avoid being exposed to this virus.**
- The virus is thought to spread mainly from person-to-person.
  - Between people who are in close contact with one another (within about 6 feet).
  - Through respiratory droplets produced when an infected person coughs, sneezes or talks.
  - These droplets can land in the mouths or noses of people who are nearby or possibly be inhaled into the lungs.
  - Some recent studies have suggested that COVID-19 may be spread by people who are not showing symptoms.

Everyone Should

Wash your hands often

- Wash your hands often with soap and water for at least 20 seconds especially after you have been in a public place, or after blowing your nose, coughing, or sneezing.
- If soap and water are not readily available, **use a hand sanitizer that contains at least 60% alcohol**. Cover all surfaces of your hands and rub them together until they feel dry.
- **Avoid touching your eyes, nose, and mouth** with unwashed hands.

EXHIBIT
2

Avoid close contact

- **Avoid close contact** with people who are sick
- **Stay home as much as possible.** | [Español]
- Put **distance between yourself and other people**.
  - Remember that some people without symptoms may be able to spread virus.
  - Keeping distance from others is especially important for people who are at higher risk of getting very sick.

Cover your mouth and nose with a cloth face cover when around others

- You could spread COVID-19 to others even if you do not feel sick.
- Everyone should wear a cloth face cover when they have to go out in public, for example to the grocery store or to pick up other necessities.
  - Cloth face coverings should not be placed on young children under age 2, anyone who has trouble breathing, or is unconscious, incapacitated or otherwise unable to remove the mask without assistance.
- The cloth face cover is meant to protect other people in case you are infected.
- Do NOT use a facemask meant for a healthcare worker.
- Continue to keep about 6 feet between yourself and others. The cloth face cover is not a substitute for social distancing.

Cover coughs and sneezes

- **If you are in a private setting and do not have on your cloth face covering, remember to always cover your mouth and nose** with a tissue when you cough or sneeze or use the inside of your elbow.
- **Throw used tissues** in the trash.
- Immediately **wash your hands** with soap and water for at least 20 seconds. If soap and water are not readily available, clean your hands with a hand sanitizer that contains at least 60% alcohol.

Clean and disinfect

- **Clean AND disinfect frequently touched surfaces daily.** This includes tables, doorknobs, light switches, countertops, handles, desks, phones, keyboards, toilets, faucets, and sinks.
- **If surfaces are dirty, clean them.** Use detergent or soap and water prior to disinfection.
- **Then, use a household disinfectant.** Most common EPA-registered household disinfectants will work.

Handwashing Resources

Handwashing tips

Hand Hygiene in Healthcare Settings

More information

Symptoms

What to do if you are sick

If someone in your house gets sick

Frequently asked questions

Travelers

Individuals, schools, events, businesses and more

Healthcare Professionals

6 Steps to Prevent COVID-19

6 Steps to Prevent COVID-19 (ASL Version)

Social Distancing (ASL Video)

ASL Video Series: What You Need to Know About Handwashing

Page last reviewed: April 24, 2020
Content source: National Center for Immunization and Respiratory Diseases (NCIRD), Division of Viral Diseases

Use of Cloth Face Coverings to Help Slow the Spread of COVID-19

How to Wear Cloth Face Coverings

Cloth face coverings should—

- fit snugly but comfortably against the side of the face
- be secured with ties or ear loops
- include multiple layers of fabric
- allow for breathing without restriction
- be able to be laundered and machine dried without damage or change to shape

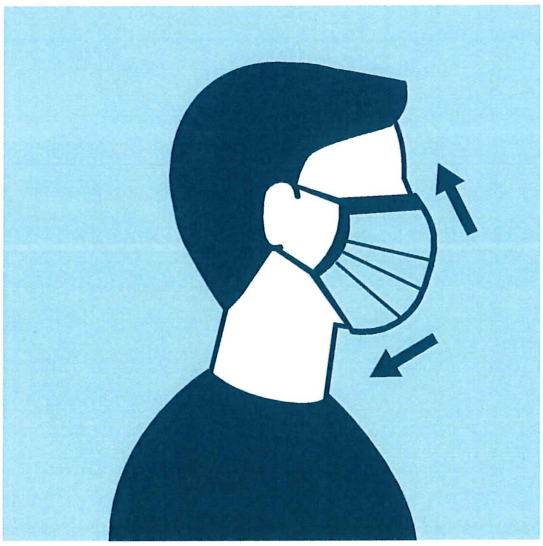

CDC on Homemade Cloth Face Coverings

CDC recommends wearing cloth face coverings in public settings where other social distancing measures are difficult to maintain (e.g., grocery stores and pharmacies), **especially** in areas of significant community-based transmission.

CDC also advises the use of simple cloth face coverings to slow the spread of the virus and help people who may have the virus and do not know it from transmitting it to others. Cloth face coverings fashioned from household items or made at home from common materials at low cost can be used as an additional, voluntary public health measure.

Cloth face coverings should not be placed on young children under age 2, anyone who has trouble breathing, or is unconscious, incapacitated or otherwise unable to remove the cloth face covering without assistance.

The cloth face coverings recommended are not surgical masks or N-95 respirators. Those are critical supplies that must continue to be reserved for healthcare workers and other medical first responders, as recommended by current CDC guidance.

Should cloth face coverings be washed or otherwise cleaned regularly? How regularly?

Yes. They should be routinely washed depending on the frequency of use.

How does one safely sterilize/clean a cloth face covering?

A washing machine should suffice in properly washing a cloth face covering.

How does one safely remove a used cloth face covering?

Individuals should be careful not to touch their eyes, nose, and mouth when removing their cloth face covering and wash hands immediately after removing.

EXHIBIT 3

cdc.gov/coronavirus

CS316353B 04/10/2020, 8:07 PM

Sewn Cloth Face Covering

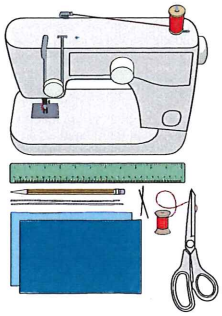

Materials

- Two 10"x6" rectangles of cotton fabric
- Two 6" pieces of elastic (or rubber bands, string, cloth strips, or hair ties)
- Needle and thread (or bobby pin)
- Scissors
- Sewing machine

Tutorial

1. Cut out two 10-by-6-inch rectangles of cotton fabric. Use tightly woven cotton, such as quilting fabric or cotton sheets. T-shirt fabric will work in a pinch. Stack the two rectangles; you will sew the cloth face covering as if it was a single piece of fabric.

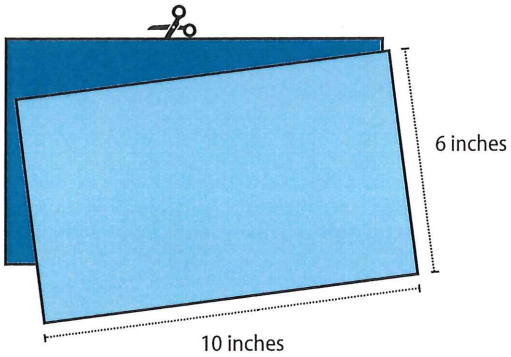

2. Fold over the long sides ¼ inch and hem. Then fold the double layer of fabric over ½ inch along the short sides and stitch down.

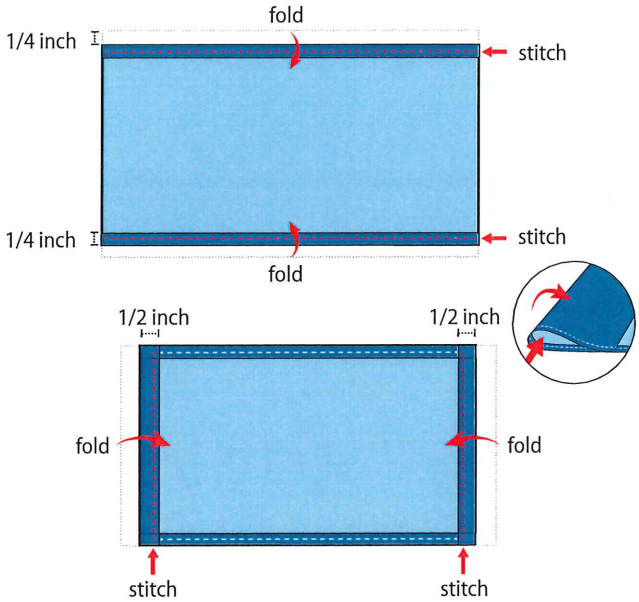

3. Run a 6-inch length of 1/8-inch wide elastic through the wider hem on each side of the cloth face covering. These will be the ear loops. Use a large needle or a bobby pin to thread it through. Tie the ends tight.
Don't have elastic? Use hair ties or elastic head bands. If you only have string, you can make the ties longer and tie the cloth face covering behind your head.

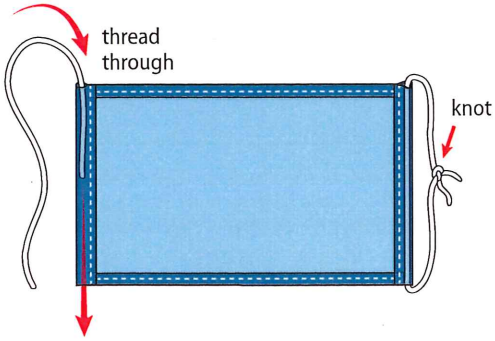

4. Gently pull on the elastic so that the knots are tucked inside the hem.
Gather the sides of the cloth face covering on the elastic and adjust so the mask fits your face. Then securely stitch the elastic in place to keep it from slipping.

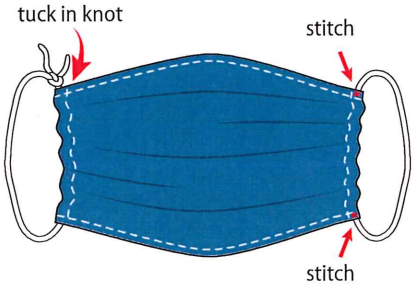

Quick Cut T-shirt Cloth Face Covering (no sew method)

Materials

- T-shirt
- Scissors

Tutorial

1.

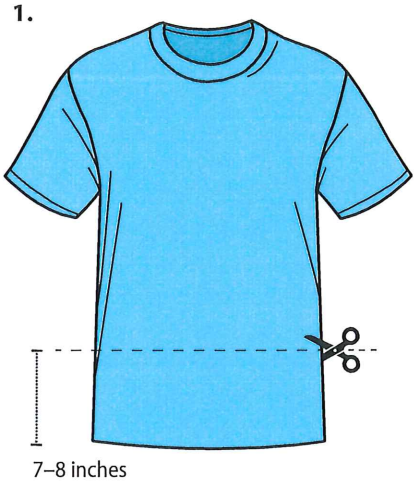

2.

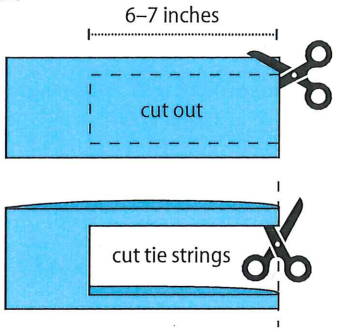

3.

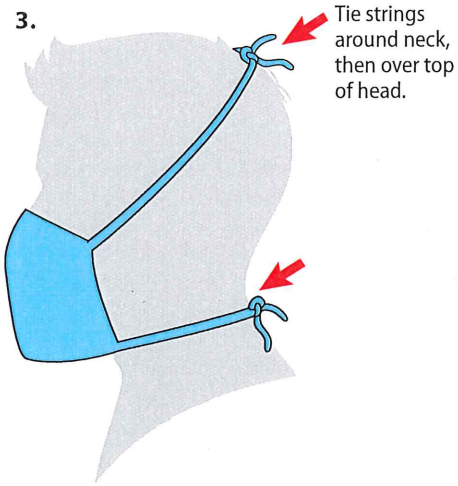

Bandana Cloth Face Covering (no sew method)

Materials

- Bandana (or square cotton cloth approximately 20″x20″)
- Rubber bands (or hair ties)
- Scissors (if you are cutting your own cloth)

Tutorial

1.

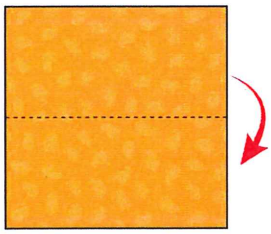

Fold bandana in half.

2.

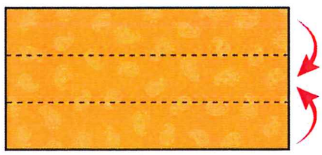

Fold top down. Fold bottom up.

3.

Place rubber bands or hair ties about 6 inches apart.

4.

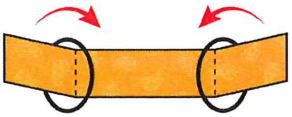

Fold side to the middle and tuck.

5.

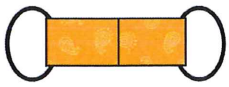

6.

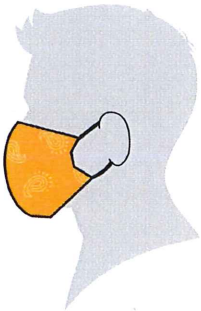

CDC REFERENCED RECENT STUDIES ON FACE COVERINGS

- Rothe C, Schunk M, Sothmann P, et al. Transmission of 2019-nCoV Infection from an Asymptomatic Contact in Germany. The New England journal of medicine. 2020;382(10):970-971. PMID: 32003551
- Zou L, Ruan F, Huang M, et al. SARS-CoV-2 Viral Load in Upper Respiratory Specimens of Infected Patients. The New England journal of medicine. 2020;382(12):1177-1179. PMID: 32074444
- Pan X, Chen D, Xia Y, et al. Asymptomatic cases in a family cluster with SARS-CoV-2 infection. The Lancet Infectious diseases. 2020. PMID: 32087116
- Bai Y, Yao L, Wei T, et al. Presumed Asymptomatic Carrier Transmission of COVID-19. Jama. 2020. PMID: 32083643
- Kimball A HK, Arons M, et al. Asymptomatic and Presymptomatic SARS-CoV-2 Infections in Residents of a Long-Term Care Skilled Nursing Facility — King County, Washington, March 2020. MMWR Morbidity and mortality weekly report. 2020; ePub: 27 March 2020. PMID: 32240128
- Wei WE LZ, Chiew CJ, Yong SE, Toh MP, Lee VJ. Presymptomatic Transmission of SARS-CoV-2 — Singapore, January 23–March 16, 2020. MMWR Morbidity and Mortality Weekly Report. 2020;ePub: 1 April 2020. PMID: 32271722
- Li R, Pei S, Chen B, et al. Substantial undocumented infection facilitates the rapid dissemination of novel coronavirus (SARS-CoV2). Science (New York, NY). 2020. PMID: 32179701
- Furukawa NW, Brooks JT, Sobel J. Evidence Supporting Transmission of Severe Acute Respiratory Syndrome Coronavirus 2 While Presymptomatic or Asymptomatic [published online ahead of print, 2020 May 4]. Emerg Infect Dis. 2020;26(7):10.3201/eid2607.201595. Link
- Oran DP, Topol Prevalence of Asymptomatic SARS-CoV-2 Infection: A Narrative Review [published online ahead of print, 2020 Jun 3]. Ann Intern Med. 2020;M20-3012. PMID: 32491919
- National Academies of Sciences, Engineering, and Medicine. 2020. Rapid Expert Consultation on the Possibility of Bioaerosol Spread of SARS-CoV-2 for the COVID-19 Pandemic (April 1, 2020). Washington, DC: The National Academies Press. https://doi.org/10.17226/25769.
- Schwartz KL, Murti M, Finkelstein M, et al. Lack of COVID-19 transmission on an international flight. CMAJ. 2020;192(15):E410. PMID: 32392504
- Anfinrud P, Stadnytskyi V, Bax CE, Bax A. Visualizing Speech-Generated Oral Fluid Droplets with Laser Light Scattering. N Engl J Med. 2020 Apr 15. doi:10.1056/NEJMc2007800. PMID: 32294341

EXHIBIT

4

- Davies A, Thompson KA, Giri K, Kafatos G, Walker J, Bennett A. Testing the efficacy of homemade masks: would they protect in an influenza pandemic? Disaster Med Public Health Prep. 2013;7(4):413-8. PMID: 24229526
- Konda A, Prakash A, Moss GA, Schmoldt M, Grant GD, Guha S. Aerosol Filtration Efficiency of Common Fabrics Used in Respiratory Cloth Masks. ACS Nano. 2020 Apr 24. PMID: 32329337
- Aydin O, Emon B, Saif MTA. Performance of fabrics for home-made masks against spread of respiratory infection through droplets: a quantitative mechanistic study. medRxiv preprint doi: https://doi.org/10.1101/2020.04.19.20071779, posted April 24, 2020.
- Ma QX, Shan H, Zhang HL, Li GM, Yang RM, Chen JM. Potential utilities of mask-wearing and instant hand hygiene for fighting SARS-CoV-2. J Med Virol. 2020. PMID: 32232986

How to Safely Wear and Take Off a Cloth Face Covering

Accessible: https://www.cdc.gov/coronavirus/2019-ncov/prevent-getting-sick/diy-cloth-face-coverings.html

WEAR YOUR FACE COVERING CORRECTLY

- Wash your hands before putting on your face covering
- Put it over your nose and mouth and secure it under your chin
- Try to fit it snugly against the sides of your face
- Make sure you can breathe easily
- Do not place a mask on a child younger than 2

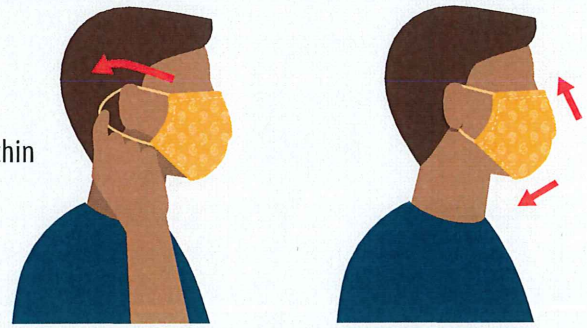

USE THE FACE COVERING TO HELP PROTECT OTHERS

- Wear cloth face coverings in public settings and when around people who don't live in your household, especially when other social distancing measures are difficult to maintain
- Don't put the covering around your neck or up on your forehead
- Don't touch the face covering, and, if you do, clean your hands

FOLLOW EVERYDAY HEALTH HABITS

- Stay at least 6 feet away from others
- Avoid contact with people who are sick
- Wash your hands often, with soap and water, for at least 20 seconds each time
- Use hand sanitizer if soap and water are not available

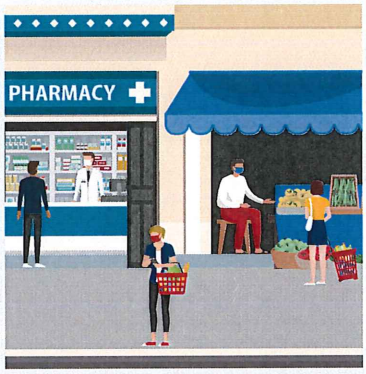

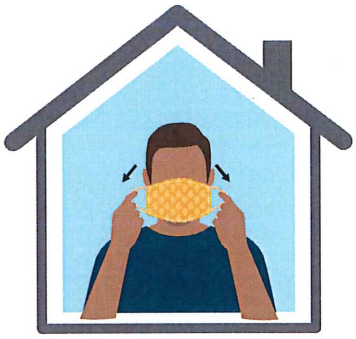

TAKE OFF YOUR CLOTH FACE COVERING CAREFULLY, WHEN YOU'RE HOME

- Untie the strings behind your head or stretch the ear loops
- Handle only by the ear loops or ties
- Fold outside corners together
- Place covering in the washing machine
- Wash your hands with soap and water

Cloth face coverings are not surgical masks or N-95 respirators, both of which should be saved for health care workers and other medical first responders.

For instructions on making a cloth face covering, see: **cdc.gov/coronavirus**

EXHIBIT 5

CS 316488A 07/06/2020

Centers for Disease Control and Prevention
CDC 24/7: Saving Lives, Protecting People™

Coronavirus Disease 2019 (COVID-19)

How to Wash Cloth Face Coverings

Updated May 22, 2020 Print

Cloth face coverings are an additional step to help slow the spread of COVID-19 when combined with every day preventive actions and social distancing in public settings.

Cloth face coverings should be washed after each use. It is important to always remove face coverings correctly and wash your hands after handling or touching a used face covering.

How to clean

Washing machine

- You can include your face covering with your regular laundry.
- Use regular laundry detergent and the warmest appropriate water setting for the cloth used to make the face covering.

Washing by hand

- Prepare a bleach solution by mixing:
  - 5 tablespoons (1/3rd cup) household bleach per gallon of room temperature water or
  - 4 teaspoons household bleach per quart of room temperature water
- Check the label to see if your bleach is intended for disinfection. Some bleach products, such as those designed for safe use on colored clothing, may not be suitable for disinfection. Ensure the bleach product is not past its expiration date. Never mix household bleach with ammonia or any other cleanser.
- Soak the face covering in the bleach solution for 5 minutes.
- Rinse thoroughly with cool or room temperature water.

EXHIBIT
6

Make sure to completely dry cloth face covering after washing.

How to dry

Dryer

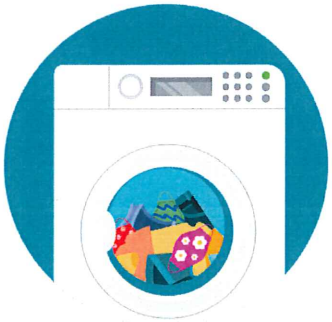

- Use the highest heat setting and leave in the dryer until completely dry.

Air dry

- Lay flat and allow to completely dry. If possible, place the cloth face covering in direct sunlight.

More Information

Considerations for Wearing Cloth Face Coverings

How to Wear Your Cloth Face Covering

How to Wash Your Cloth Face Covering

How to Make Your Own Cloth Face Covering

ASL Video Series: Easy DIY Cloth Face Covering

How to Make Your Own Face Covering Video (Spanish)

Page last reviewed: May 22, 2020

Content source: National Center for Immunization and Respiratory Diseases (NCIRD), Division of Viral Diseases

BILL NO. 5837 **ORDINANCE NO. _____**

AN ORDINANCE AMENDING CHAPTER 58 OF THE BRANSON MUNICIPAL CODE PERTAINING TO FACE COVERINGS, PUBLIC SPACES AND THE SPREAD OF COMMUNICABLE DISEASES.

WHEREAS, In December 2019, a new coronavirus known as SARS-CoV-2 was first detected in Wuhan, Hubei Province, People's Republic of China, causing outbreaks of the coronavirus disease (COVID-19) that has now spread globally and into the United States; and

WHEREAS, COVID-19 is spread between people who are in close contact with one another (within about 6 feet) or through respiratory droplets produced when an infected person coughs or sneezes and as such presents an imminent threat of widespread illness and even death in some cases; and

WHEREAS, on March 11, 2020, the World Health Organization characterized COVID-19 as a pandemic; and

WHEREAS, on March 13, 2020, President Donald Trump, under the Constitution and the laws of the United States of America, including sections 201 and 301 of the National Emergencies Act (50 U.S.C. 1601 et seq.) and consistent with section 1135 of the Social Security Act (SSA), as amended (42 U.S.C. 1320b-5), found and proclaimed that that the COVID-19 outbreak in the United States constitutes a national emergency; and

WHEREAS, on March 13, 2020, Governor Michael Parson, signed Executive Order 20-02 declaring a state of emergency in the State of Missouri in response to COVID-19 and that state of emergency has been extended under Executive Order 20-12 to December 31, 2020; and

WHEREAS, on March 17, 2020, an emergency proclamation was issued by the Mayor of the City of Branson in accordance with Chapter 34 of the Branson Municipal Code and Chapter 44 of the Missouri Revised Statutes in response to life health and safety risk to the citizens of Branson as a result of the COVID-19 pandemic; and

WHEREAS, Governor Michael Parson announced through a press release on June 11, 2020 that the State of Missouri would "fully reopen" and "there will be no statewide health order" in place; and

WHEREAS, COVID-19 has spread rapidly amongst the population of Missouri with twenty-seven thousand four hundred and forty-three (27,443) reported cases and one thousand sixty-nine (1,069) deaths as of 2pm on Sunday, July 12, 2020; and

WHEREAS, Taney County has seen a 846% increase from thirteen (13) positive COVID-19 cases on June 6th to one-hundred and twenty-three (123) positive COVID-19 cases as of 2pm on Sunday, July 12, 2020; and

WHEREAS, health professionals and experts including members of the Centers for Disease Control (CDC), Cox Health and our local Health Department have consistently maintained that face coverings and social distancing are critical components to slowing the spread of COVID-19; and

WHEREAS, the CDC recommends the use of face coverings based on the role respiratory droplets play in the spread of the virus that causes COVID-19, paired with emerging evidence from clinical and laboratory studies that shows cloth face coverings reduce the spray of droplets when worn over the nose and mouth; and

WHEREAS, the Board of Aldermen "may make regulations and pass ordinances for the prevention of the introduction of contagious diseases in the city, and for the abatement of the same, and may make quarantine laws and enforce the same within five miles of the city" under Section 78.380 of the Missouri Revised Statutes.

NOW THEREFORE, BE IT ORDAINED BY THE BOARD OF ALDERMEN OF THE CITY OF BRANSON, MISSOURI, THE FOLLOWING:

Section 1: It is the intention of the Board, and it is hereby ordained, that the provisions of this ordinance shall become and be made a part of the Branson Municipal Code, and the sections of this ordinance may be renumbered to accomplish such intention.

Section 2: That Chapter 58, Article I – *In General*; Chapter 58 – Article X – *Communicable Disease*; Section 58-1 – *Definitions*; Section 58-386 –*Purpose;* Section 58-387 – *Personal Conduct Prohibited;* Section 58-388 – *Operation of Public Spaces;* Section 58-389 –*Signage, Section 58-390 - Penalties* of the Branson Municipal Code are hereby amended or added to read as follows:

ARTICLE I. – IN GENERAL

Sec. 58-1 – Definitions.

Public space **means for purposes of this Chapter an indoor or outdoor area to which the public is invited or in which the public is permitted, including but not limited to, banks, convention facilities, common areas, promenades, shopping malls, common areas of hotels and motels, laundromats, museums, reception areas, restaurants, retail establishments, retail stores, schools, spas, sports arenas, theaters, waiting rooms, amusement parks, attractions, and any place where food is prepared or stored.**

Face covering **means a particulate mask or fabric covering of the nose and mouth secured to the face with ties, loops or elastic that is covering the nose and mouth.**

ARTICLE X- COMMUNICABLE DISEASE

Sec. 58-386 – Purpose

This article is enacted to mandate restrictions on conduct to prevent the introduction and spread of contagious diseases in the City by requiring face coverings and encouraging social distancing amongst persons in the City.

Sec. 58-387 – Personal Conduct Prohibited

Except as otherwise provided in this Article, it is unlawful for any person to be in a public space without wearing a face covering subject to the following exceptions:

(1) Children under the age of 13;

(2) Any person with a health condition documented by a medical professional that prohibits wearing a face covering;

(3) Any person who is hearing impaired, or someone who is communicating with a person who is hearing impaired, where the ability to see the mouth is essential for communication;

(4) Any person who is in a public place consuming food, drink, or smoking while seated and maintaining a physical distance of at least six feet from other persons who are not family members or reside together, but such persons must wear a face covering while in waiting areas and while walking to and from seating or other parts of the premises;

(5) Any person in the water at a swimming pool;

(6) Any person who is obtaining a service involving the head, face or nose for which temporary removal of the face covering is necessary to perform the service;

(7) Any person playing a sport, exercising or using exercise equipment;

(8) Any person who is outdoors while maintaining physical distancing of at least six feet, except as otherwise provided in this Article;

(9) Any person who is outdoors who is closer than six feet to family members or people who they reside with;

(10) Any person performing on a fixed stage;

(11) Any person engaged in public speaking who maintains a minimum physical distance of six feet from others who are not family members or who reside together; and

(12) Any public safety officer engaged in an emergency situation.

Section 58-388 – Operation of Public Spaces

It is unlawful for any person operating a public space to allow any person in the public space who is not wearing a face covering unless that person in the public space is excepted from wearing a face covering as provided in this Article.

Section 58-389 – Signage Required for Business Operations

(a) It shall be unlawful for any business to be open to the public unless at the points of ingress and egress to the premises there is prominently displayed a sign no smaller than 8.5 inches tall by 11 inches wide which shall contain the following in red lettering at least one-half inch high on white background:

"1. IT IS A VIOLATION OF THE LAW TO ENTER THE PREMISES WITHOUT A FACE COVERING. IF YOU DO NOT FEEL WELL GO HOME.
2. PLEASE MAINTAIN AT LEAST SIX FEET (6') OF DISTANCE BETWEEN INDIVIDUALS THAT ARE NOT FAMILY MEMBERS OR DO NOT RESIDE TOGETHER."

(b) A business shall be in compliance with this Section if they display signage that has been provided to the business by the City of Branson.

Section 58-390 – Penalties

(a) A person who fails to wear a face covering when wearing a face covering is required by the provisions of this Article upon conviction shall be punished by a fine of $100.00 and court costs.

(b) A person who owns, manages, operates, or otherwise controls a public place at which wearing face covering is required by this Article and who fails to comply or to require compliance with the provisions of this Article upon conviction shall be punishable by a fine of $100.00 and court costs.

No person shall be in violation of this subsection if such person or the place the person owns, manages, operates or otherwise controls requires compliance with the provisions of this Article to wear a face covering and a person that is allowed in the public space refuses to wear a face covering.

(c) In addition to the fines established by this section, violation of this Article by a person who owns, manages, operates, or otherwise controls a public place at which face coverings are required by this Article may result in the suspension or revocation of any permit or license issued to the person for the premises on which the violation occurred.

NOTE: LANGUAGE WHICH IS **BOLD, UNDERLINED** HAS BEEN ADDED; LANGUAGE WHICH IS [~~BRACKETED, STRICKEN~~] HAS BEEN REMOVED.

Section 3: This ordinance shall be in full force and effect at 12:01 AM on July 20, 2020 after its passage by the Board of Aldermen and approval by the Mayor and remain in effect until 11:59 PM August 20, 2020 at which time the Sections above will be repealed in their entirety unless extended by the Emergency Management Director and the City Administrator.

Section 4: The Board of Alderman hereby authorize the Emergency Management Director and the City Administrator to extend this ordinance by order if necessary, to protect the health, welfare and life of citizens of the City against the introduction or spread of contagious diseases in the City.

Read, this first time on this _____day of _____ 2020.

Read, this second time, passed and truly agreed to by the Board of Aldermen of the City of Branson, Missouri on this _____ day of _____2020.

_____
E. Edd Akers
Mayor

ATTEST:

_____
Lisa K Westfall
City Clerk

APPROVED AS TO FORM:

CLL #51831 7/16/20
_____
Chris Lebeck #51831
City Attorney